Haier

ULT Free-standing Backup Refrigerator System

Operation Manual

HBX-I/HBX-IA
HBX-II/HBX-IIA

Certificate of Quality

Checker:

Manufacturer:Qingdao Haier Biomedical Co.,Ltd.
Address: Haier Industrial Park, Economic Technology Development Zone, Qingdao P.R. China
Wed:www.haiermedical.com
Version:1st , 2018
Dedicated code:0270500222
V13026

- Read the Operation Manual carefully before using your appliance.
- Keep the Operation Manual in a safe place.
- Appearance, color and layout of the door may vary.

Contents

Product Introduction.....1

Product Features.....2

Precautions.....3

Transportation and Installation.....4

Temperature Adjustment 6

Unit start-up and tuning.....6

Maintenance.....7

Technical Specification.....8

Package.....9

Installation.....10

The actual design and color of the unit you received may vary as a result of continuous improvements.

Product introduction

Free standing CO2 and LN2 backup refrigeration systems are designed to provide emergency refrigeration for ultra low temperature freezers. The backup system is comprised of a control system and a feeding system. The control system modulates a liquid feeding solenoid valve to provide the freezer with a certain amount of liquid CO2 or liquid LN2 to cycle the freezer's temperature within a range. The backup system is equipped with a rechargeable battery which powers the system to sustain the refrigeration.

Description of components

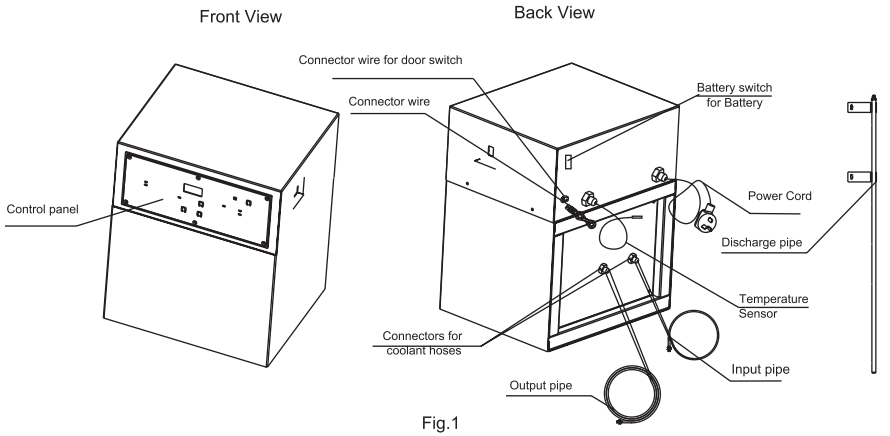

Fig.1

Due to continuous improvement, the product that you receive may not resemble what is depicted in the picture.We apologize for this inconvenience.

13. Correctly position the switch back into the slot as when removed from the slot and this completes the wire connection to the freezer. Close the freezer front door.





14. Put back the bottom right cover and screw it back to the freezer with the two screws.



15. Connect the power supply cable plug of the backup system onto a wall power socket so that when the power is resumed, the backup system battery can be recharged. Please take note that the battery can last for about 8 hours.

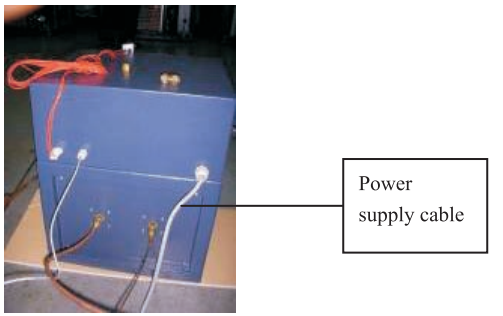

The above steps complete the installation for the backup system.

10. Pull the red connector wire from the back-up system and insert through the back bottom cover slotted hole as shown.

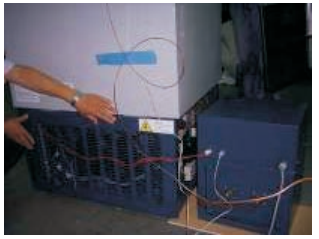

11. Further pull the two free ends of the red connector wire towards the front door position along the right side bottom of the freezer where the cover has been removed as in step 9.



12. Open the freezer front door which will expose the door switch. Take note of the switch direction. Use hand through the open right bottom to push up the door switch and pull the two free ends of the red connector wire through the slot opening as shown. Connect the two female ends of the connector wire onto the male taps of the door switch.





Product Features

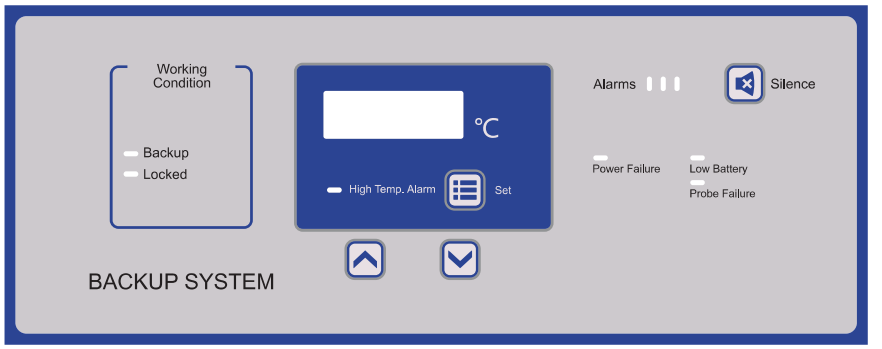

- Temperature Display:
  Display shows the actual freezer temperature.
- Operational Status:
  When "Backup" light is lit, the backup feeding solenoid valve is turned on. When "locked" light is lit, all settings are in the lockout condition; this is to prevent accidental operation.
- Alarm Indicator:
  When there is an alarm condition, it is signaled by a flashing light and buzzer sound. The flashing light cannot be canceled until the malfunction has been cleared. The buzzer alarm can be canceled by pressing "Silence" button.
  A."Probe Failure" light: Indicator light is lit to suggest there is a malfunction with the temperature sensor.
  B."Power Failure" light: Indicator light is lit when there is a loss of power supply.
  C." Low Battery " light: This indicator is lit when the battery charge is low. It must be re-charged. When the freezer is powered up, the battery is charged automatically.
- Battery Power Saving Mode
  When the backup system is operating on battery power, the control display panel will run on screen saver mode where temperature will be displayed for only 5 seconds in 30 second intervals.
- Keys on Control Panel
  There are four keys on the control panel. When the "Lock" light is lit, all keys are in the lockout mode. This is to prevent accidental operation.
- "SET"
  When the control is in the unlocked mode, pressing the key can change the temperature setting. Corresponding indicator turns on.
- "Silence"
  When the control is in the lock mode, pressing the "Silence"button silences the alarm for one hour. The flashing light cannot be canceled until the malfunction is removed.
- Up and Down Arrows
  They are used to increase and decrease the temperature setting.

Precautions

Please read the manual carefully. Follow the instructions provided in the manual to install and operate the backup system. VWR cannot be held responsible for any damage as a result of improper action with the backup system.

Precautions for Installation Location

Do not install a backup system in an enclosed or narrow space. Although CO2 and LN2 are non-toxic, evaporation of large amounts of such liquids displaces oxygen gas which can cause deadly suffocation. Please be sure that the installation area is sufficiently ventilated.

Precautions during Operations

1.If an CO2 or LN2 cylinder falls to the floor, its control valve can be knocked off causing tremendous danger to the surroundings. During transit, be sure to fasten the cylinder properly to prevent accidental falling. After the cylinder is connected to the backup system, make sure that the cylinder is fastened securely to a fixture.

2.Be sure to use cylinders with siphon tubes.

3.Expanded CO2 liquid and LN2 liquid are extremely cold. They can cause skin damage if exposed. When these cryogen-containing cylinders and tubing systems are moved, operators must wear safety glasses and gloves.

4.When the main valve on the cylinder is being turned off, be sure to turn on the solenoid valve to let the liquid out of the valve. A sudden stop of liquid movement can cause a pressure surge if the solenoid valve is closed which could trip the safety relief valve or cause damage.

5.For the safety of operators and trouble-free operations, the apparatus must be grounded properly. Poor grounding connection can cause injury to operators or damage to property. Do not install the unit to a circuit that is already overloaded.

6.Do not modify or change system components. Do not use any spare parts that are not approved by the manufacturer. Unapproved parts can cause the system to malfunction which, in turn, can cause severe injury to operators. VWR cannot assume any liability resulting from this.

Users must confirm the backup system is suitable for the application.

7. Use black spongy material provided with the backup system to seal up the access port so as to prevent cold air from leaking out of the freezer.



8. Follow figure3 to install the liquid feed line and distribution system. Ensure no leakage in the connections. The LN2 or CO2 cylinder should be placed behind the backup system. Fasten the cylinders securely to a fixture.



9. Looking at freezer front direction, locate the right bottom cover and remove the 2 screws by Philips screw driver. Remove the bottom cover as shown.





4. Pick up the discharge tube provided and connect the end with threads by screwing it into the output tube with screw cap. Apply sufficient torque to tighten the discharge tube and output tube together.



5. Use stainless steel screws (M3.5) provided with the backup system to tighten the discharge tube in position inside the freezer. See picture for the two screw holes (marked with red circle) inside the left side of freezer.



6. Locate the temp sensor from the back-up system and place it next to the freezer sensor, which is a stainless steel slotted box. Use tie cord as shown to tie these two sensors together. Use tape to hold the temperature sensor cable onto the inside of the freezer in an orderly manner.



Transportation and Installation

Transportation

The system must be in an upright position during transportation. Handle it with care to avoid damage.

Before installation

1.Please strictly follow the instructions on the product label to install the unit. The design voltage is 220~230 VAC / 50 Hz , 220~230 VAC / 60 Hz and 120 VAC / 60 Hz. Wiring must be done by qualified technical personnel. The product must be grounded properly.
2.Never connect the ground wire and neutral wire together. Otherwise, the equipment may be electrified causing severe injury and harm to operators.
3.Do not drill a hole in the liner of the ULT freezer. Refrigeration tubing behind the liner can be damaged and refrigerant leaks could occur if punctured. The ULT freezer would not be repairable if this occurs.

Pressure Requirement and Safety Protection

1.The operating pressure for the liquid CO2 backup system is 900 ~ 1000 psig. If the pressure exceeds 1300 psig, a safety valve on the liquid feed line is activated to relieve the pressure. Please be aware that the relief valve should be installed by qualified technical personnel. VWR does not provide the safety valve for the backup system.
2.The recommended operating pressure for the LN2 system is 35~60 psig. When the pressure in the feed line exceeds 50 psig, a safety valve on the liquid feed line is activated to relieve the pressure. Please be aware that the customers are responsible for hiring a qualified technical personnel to install the relief valve. VWR does not provide the safety valve for the backup system.

Installation

1.Place the backup system on top of the ULT freezer or next to it. The LN2 dewar or CO2 cylinder should be placed behind the back system. Fasten the cylinders securely to a fixture.
2.Install the door switch in the location as illustrated in Fig 2. Connect the door switch with a harness to the connector in the back of the backup system.
3.Sensor installation from backup system. Pick up the sensor from the back of the backup system and insert this sensor into the freezer through the access port located at the back top of the freezer. Locate the probe inside the freezer and tie the sensor from backup system together with the probe in close contact. After this is done, seal up the access port with black spongy material provided with the backup system.
4.Follow Figures 3 and 4 to install the liquid feed line and distribution system.

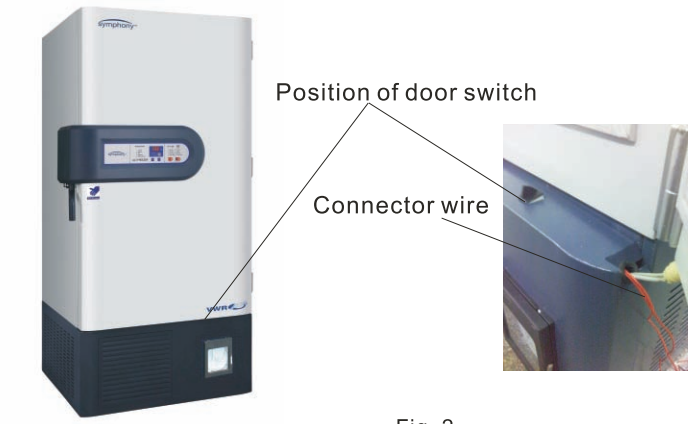

Fig. 2

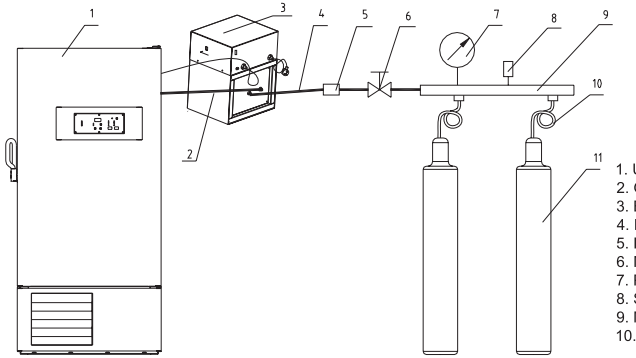

1. ULT freezer
2. Output pipe (provided)
3. Backup System (provided)
4. Input pipe(provided)
5. Filter (not provided)
6. Manual shut off valve (not provided)
7. Pressure gauge (not provided)
8. Safety relief valve (not provided)
9. Mainfold(not provided)
10. Connection tubes for CO_2/LN_2 cylinders (not provided)
11. CO_2/LN_2 cylinders (not provided)

Fig.3

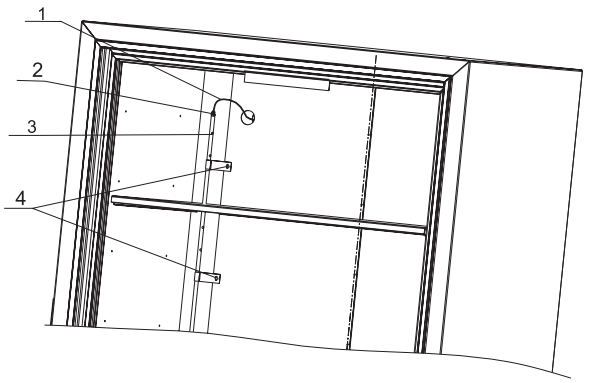

1. Output pipe (provided)
2. Connecting nut(provided)
3. Discharge pipe(provided)
4. M3.5X9.5stainless screw (provided)

Fig.4

Installation

Installation Procedure

N.B. It is recommended that this installation is carried out by a qualified technician.

1. Locate the access port situated at the top right back of the freezer and pull out the cover of the access port





2. Identify the output tube and the temperature sensor cable and connect them to the back of the back-up system as per Fig 1. Pull these right up and insert them with sufficient length into the access port opening. Use tape to hold these in place at back as shown once sufficient length are inserted inside the freezer.



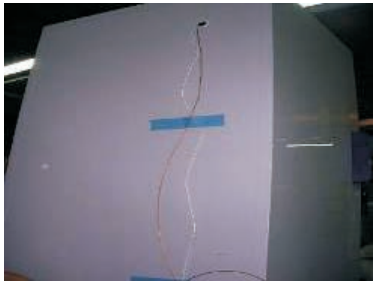

3. Open up the freezer front door and open up the 4 compartment doors and you will see the ends of the output tube and temperature sensor cable. The output pipe should be carefully bent by hand so as not to cause breakage in the tubing. Pull temperature sensor cable with sufficient length towards the right of the freezer so that the temperature sensor can be connected to the freezer sensor as shown in step 6.



Package

Description	Discharge pipe	User manual	Plastic bag	Output pipe	Input pipe
Backup System	1	1	1	1	1



Meaning of crossed out wheeled dustbin:
Do not dispose of electrical appliances as unsorted municipal waste, use separate collection facilities.
Contact your local government for information regarding the collection systems available.
If electrical appliances are disposed of in landfills or dumps, hazardous substances can leak into the groundwater and get into the food chain, damaging your health and well-being.
When replacing old appliances with new ones, the retailer is legally obligated to take back your old appliance for disposals at least free of charge.

Temperature Adjustment

The backup system is equipped with security code protection and key locking protection features.
To unlock the device, users should press the "^" key. The freezer temperature display flashes. Press the "^" or "v" key again to change the setting to "06". Press and hold the "SET" key. The keys will be unlocked after 8 seconds.

1.Initial start up condition
Power up the backup system by switching the battery swith "On" on the side of the backup unit. The backup system is powered up. All parameters are the same as what they were in the last power outage. Display shows the actual freezer temperature. The factory set temperature is -70℃. If the actual temperature is higher than the set point temperature, the backup refrigeration system will start working after one minute delay. If, at the same time, the actual temperature falls in the temperature alarm range, alarm light flashes and buzzer sounds.

2.Adjustment of set temperature

2.1 Unlock the control as described before.
2.2 After the control is unlocked, press the "Selection of Functions" key to change the temperature setting. After pressing this key to show "Temperature setting", the display shows the flashing current temperature setting. Use the "^" or "v" to change the temperature digits. Pressing the arrow keys intermittently changes the temperature setting by 1℃ .Pressing the keys continuously accelerates change process. Once there is no more adjustment on the keys for five seconds, the temperature display stops flashing to indicate the setting has been stored in the control. If within five seconds, there is more adjustment, the new setting is not stored in the control board. The temperature range is -40 ℃~ -99 ℃.
3.If there is no need to run the backup system, the power switch on the side of the backup unit should be turned off. If the battery's power is depleted, the battery may not be chargeable.

Unit Start-up and Tuning

1.Turn on the ultra low temperature freezer. Let it run down to the set point temperature.
2.Turn on the backup battery switch.
3.Start the test procedure. Set the temperature at least 10℃ colder than the freezer temperature. At this time, the backup control should turn on the backup liquid injection into the freezer. When the freezer is opened, the injection should be stopped. Closing the door allows the continuation of liquid injection. If there is an abnormality, inspect the door harness for proper connection. Also inspect the door switch to make sure it activates and de-activates the contacts as the door is opened and closed. Please note that this procedure should also be used as a preventive maintenance procedure to verify the system works properly.
4.When the freezer works properly, set the backup system's temperature 10℃ warmer than the freezer's temperature. Please also note that the CO2 system

injects liquid continuously if the set point temperature is lower than -75 ℃.
5.If the freezer is turned off, please unplug the door switch harness from the back of the backup system. This prevents the solenoid valve from injecting while keeping the battery charged.
6.Keep the backup system connected to a power supply. If the battery discharges for a long period of time, it may not be rechargeable.
7.The consumption rate of CO2 and LN2 liquid depends on the size of the freezer and the sample load stored inside the unit. The average consumption rate is about 2 to 4 kg/hour.

Maintenance

The backup refrigeration system should be cleaned regularly before its first use, during usage, and before discontinuing use. For your safety, make sure the unit's power is unplugged. Then use a soft cloth with a mild detergent solution for cleaning. Use a dry cloth to wipe it dry to prevent it from getting rusty.

Never use a strong solution such as organic chemicals, boiling water, detergent or acid to clean the equipment. Never use a hard wire brush to clean the equipment. Do not use a water hose to flush the equipment. If the equipment is out of service for a long time, please clean it with the instructions mentioned above.

The equipment should be inspected by a qualified technical personnel on a regular basis.Should there be any issues,the should be promptly repaired.

CIRCUIT DIAGRAM

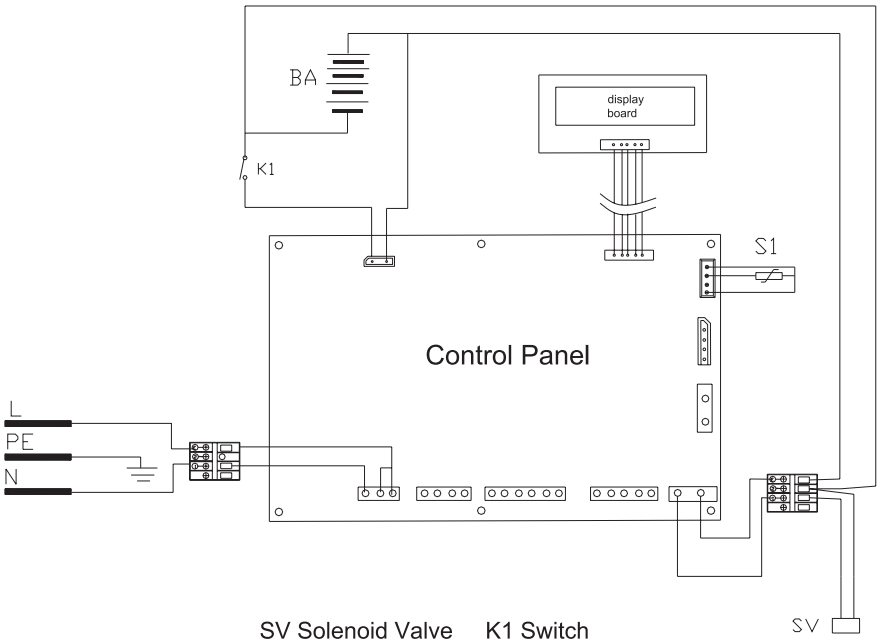

SV Solenoid Valve K1 Switch
S1 Pt100 sensor BA Battery

Technical Specification

Model	Backup System
Dimensions(WxDxH)(mm)	360×305×445
Rated Current	50mA
Rated Voltage	220VAC/60Hz or 120VAC/60Hz or 220VAC/50Hz
Net Weight	17kg